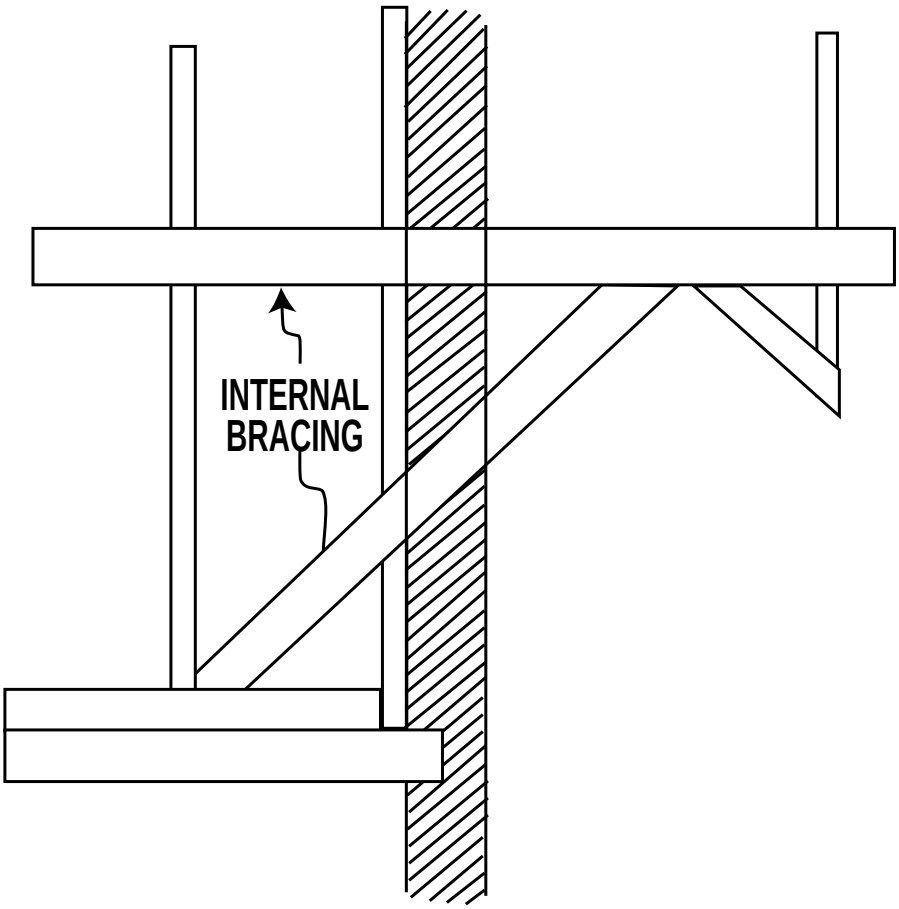Outrigger Scaffold