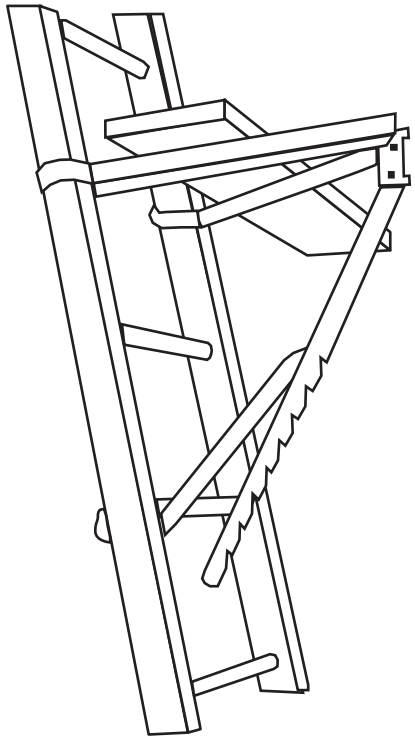Ladder Jack Scaffold