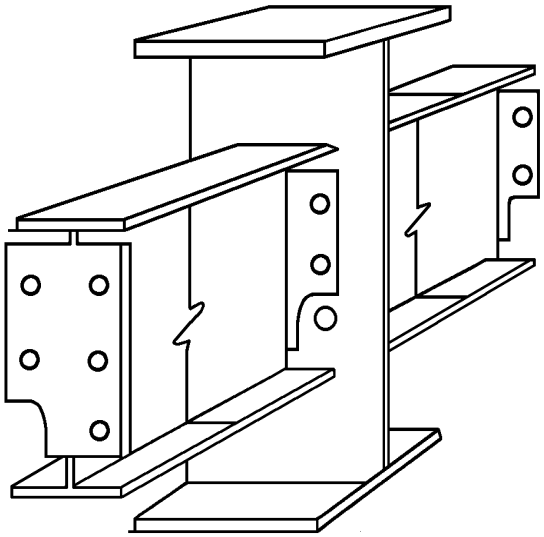

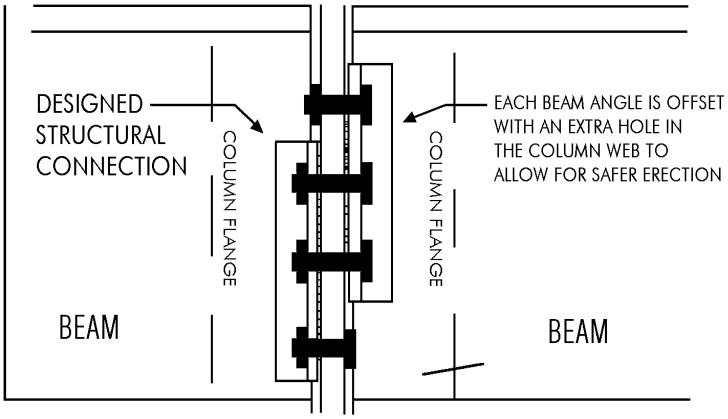
DESIGNED
STRUCTURAL
CONNECTION
COLUMN FLANGE
COLUMN FLANGE
EACH BEAM ANGLE IS OFFSET
WITH AN EXTRA HOLE IN
THE COLUMN WEB TO
ALLOW FOR SAFER ERECTION
BEAM
BEAM